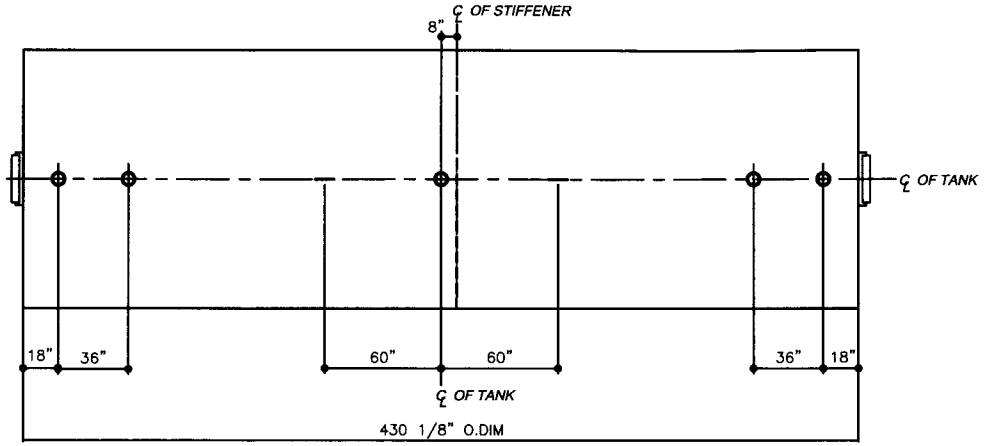

TOP VIEW

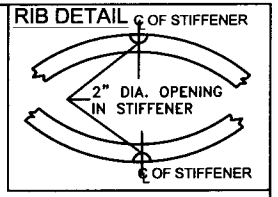

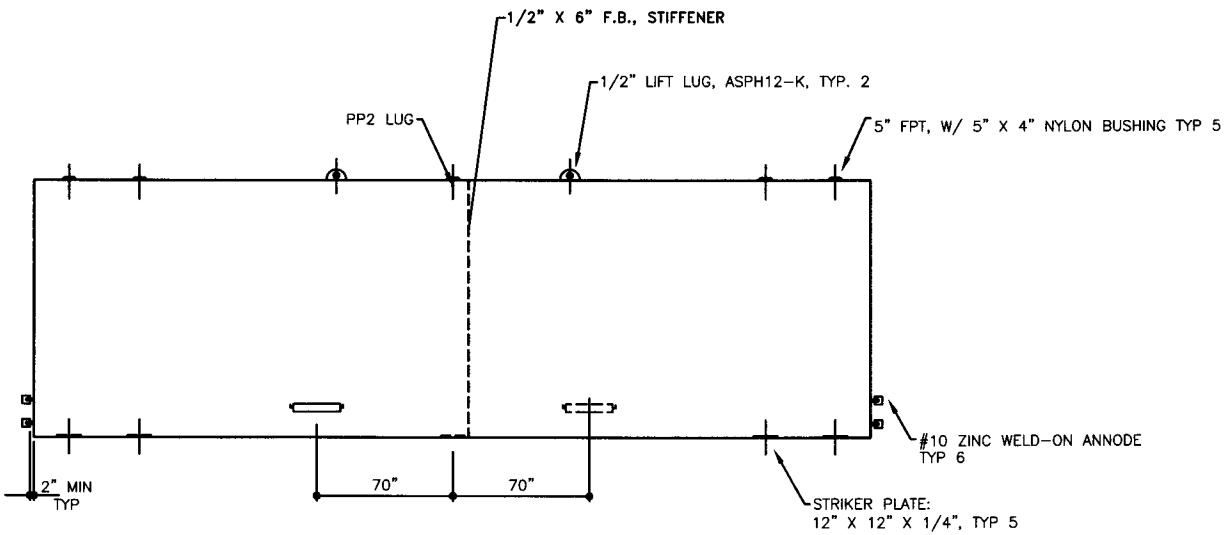

ELEVATION - SIDE VIEW

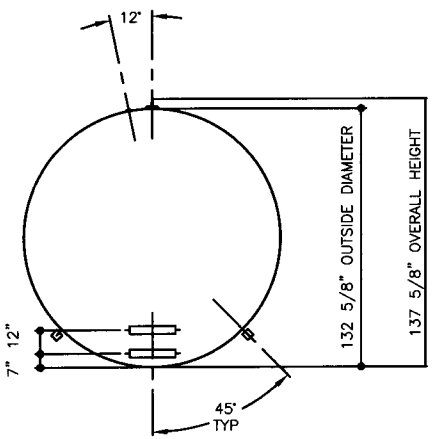

ELEVATION - END VIEW

TOLERANCES	
TANK	
CAPACITY	-0% / +10
OVERALL LENGTH	-0" / +2"
OVERALL WIDTH	-0" / +1"
OVERALL HEIGHT	-1/2" / +1/2"
OTHER DIMENSIONS	-1/4" / +1/4"

1-206-281-5000

Acetank & EQUIPMENT

COPYRIGHT 1997 ACE TANK & EQUIPMENT

UL, 1746 (BUILT & LABELED)
STI, P3 (BUILT & LABELED)
SINGLE WALL

Sti-P3 - 25,000 GALLON

ACE PART No. AC25000U1P1B | QTY: 1

(F:\1\1ACSHOP\STI-P3\U1P1\25000\2-ORTHO.GCD-1:64)

STEEL: ASTM A36

PRIMARY TANK
SHELL: 0 GAUGE (5/16")
HEAD: 0 GAUGE (5/16")

COATING:

INTERIOR:
BARE STEEL

EXTERIOR:
SP-6 SANDBLAST
KOPPERS 300M COAL TAR EPOXY 16 MIL MIN

SURFACE AREA: 1,654.3 SQUARE FEET

SPECIAL INSTRUCTIONS

LABELS ON EDGE

DRY PLUG FITTINGS

SCRAPE OUTSIDE SPATTER

SEAL WELD FOR SPECIAL COATING OR SAND BLASTING

APPROXIMATE SHIPPING WEIGHT
19375 LBS.

ACE HOUSE PAPER No. -
ENG. FILE No. -

1-22-99 SUPERCEDES 12-2-97

DRW BY -
REV No 1
SHEET 2 OF